FORM 3A

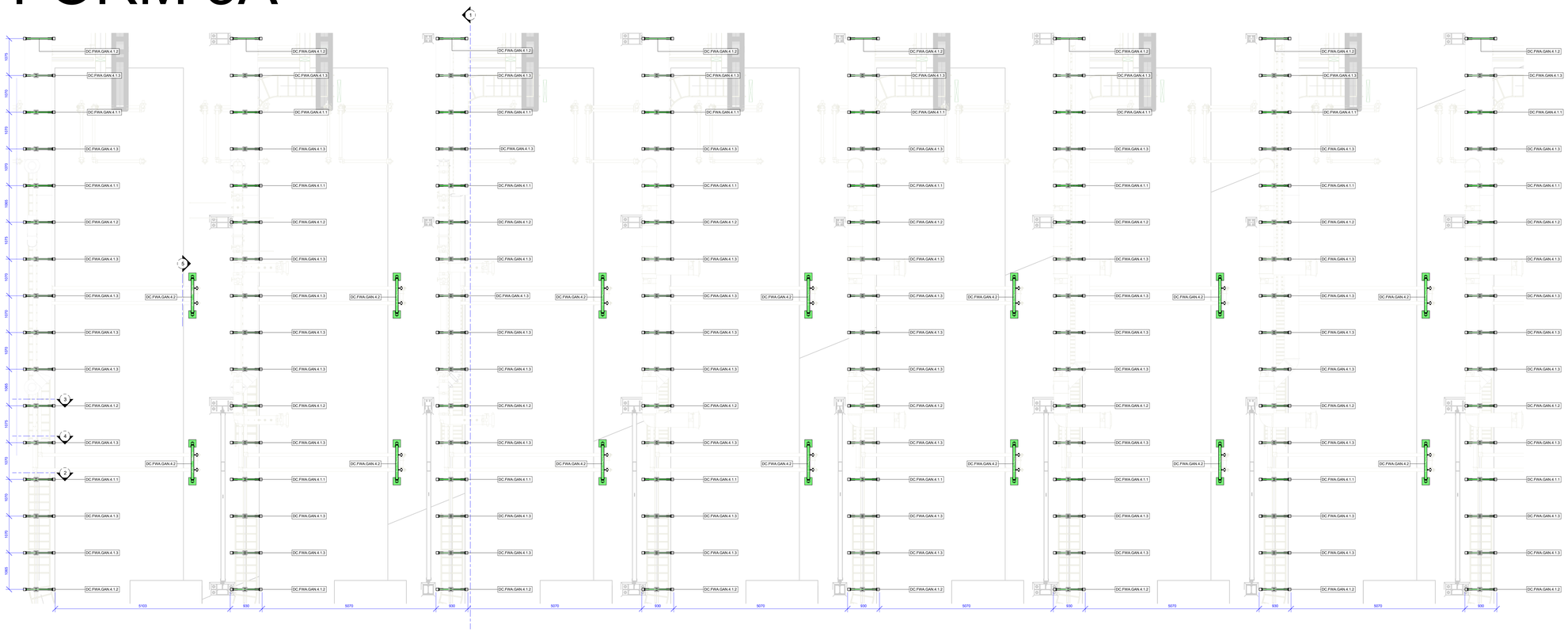

A | Building 1 - Supports - South Gantry - Zone 04 - Plan View

SCALE: 1 : 50

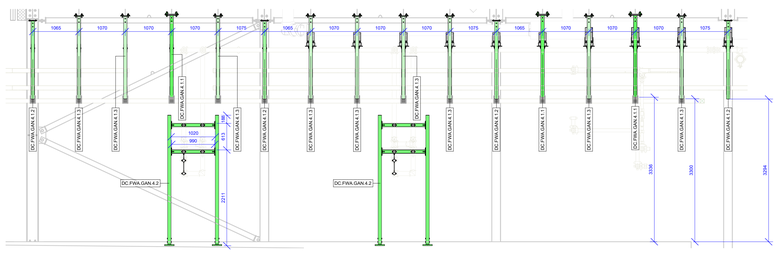

1 | Building 1 - Supports - South Gantry - Zone 04 - Section 1

SCALE: 1 : 50

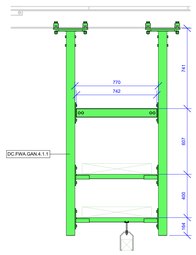

2 | Building 1 - Supports - South Gantry - Zone 04 - Section 2

SCALE: 1 : 20

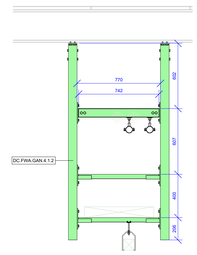

3 | Building 1 - Supports - South Gantry - Zone 04 - Section 3

SCALE: 1 : 20

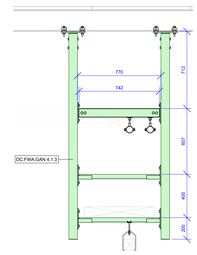

4 | Building 1 - Supports - South Gantry - Zone 04 - Section 4

SCALE: 1 : 20

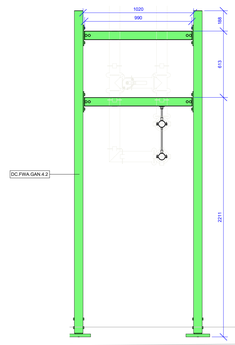

5 | Building 1 - Supports - South Gantry - Zone 04 - Section 5

SCALE: 1 : 20

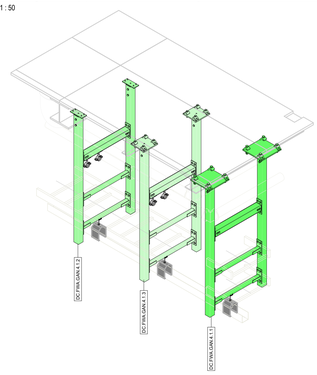

3D1 | Building 1 - Supports - South Gantry - Zone 04 - 3D ISO 01

SCALE:

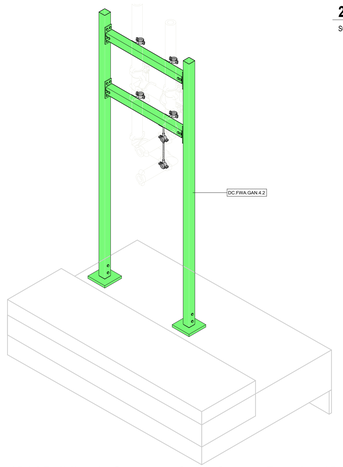

3D2 | Building 1 - Supports - South Gantry - Zone 04 - 3D ISO 02

SCALE:

NOTE:

FORM3A Instalation:
Setting out of each support type in both plan, elevation and 3D type views.
Refer to FORM2A for further detailing.

Fixing points of the MS41 profiles to the ceiling (hollow core) to be defined on site according to the existing slab conditions.
By default the FORM 2A is setting the profiles at 750mm length to match at least 3 anchoring points per profile.
It is recommended that if required, the support relative position to the MS 41 profile shall be rearranged to guarantee the anchoring conditions mentioned above.

OVERVIEW

MC Prefab is a collaborative joint venture between CTS, MECWIDE, and BIMMS. The primary objective of this partnership is to streamline the production of Mechanical, Electrical, and Plumbing (MEP) support structures.
To achieve standardization and optimization in support production, installation, and to minimize material waste, a comprehensive catalog of solutions has been developed. This catalog defines all support solutions along with their respective variables.

Process Stages:
The overall process of MEP support structure production and installation is divided into three distinct stages:
1-Preparation
2-Production
3-Installation
Each stage requires specific documentation, outlined as follows:
Form1A: Base Specification for Support Solution Definition
Form2A: Fabrication Drawing
Form3A: Installation Drawing
These documents ensure the standardization and efficiency of the entire process, from initial preparation through to final installation.

For any further details or clarifications, please refer to the MC Prefab documentation guidelines or contact the project management team.

Naming Convention

DC.FWA.COR.1.1-1A
- Document Type
- Support Type
- Building Area Type
- Project Standard Type
- Project Type

Legend:

Colour	Description
	DC.FWA.COR.1.1.1
	DC.FWA.COR.1.1.2
	DC.FWA.COR.1.2.1
	DC.FWA.COR.1.2.2
	DC.FWA.COR.2.1
	DC.FWA.COR.2.2
	DC.FWA.COR.2.3
	DC.FWA.COR.3.1
	DC.FWA.COR.3.2
	DC.FWA.COR.4.1
	DC.FWA.COR.4.2
	DC.FWA.COR.4.3
	DC.FWA.WSP.1.1
	DC.FWA.WSP.1.2
	DC.FWA.WSP.1.3
	DC.FWA.WSP.1.4
	DC.FWA.LDB.1.1.1
	DC.FWA.LDB.1.1.2
	DC.FWA.LDB.1.1.3
	DC.FWA.LDB.1.1.4
	DC.FWA.LDB.1.1.5
	DC.FWA.LDB.1.1.6
	DC.FWA.GAN.1.1
	DC.FWA.GAN.1.2
	DC.FWA.GAN.2.1.1
	DC.FWA.GAN.2.1.2
	DC.FWA.GAN.3.1
	DC.FWA.GAN.4.1.1
	DC.FWA.GAN.4.1.2
	DC.FWA.GAN.4.1.3
	DC.FWA.GAN.4.2
	DC.FWA.GAN.5.1

Supports Quantities

Type	Count
DC.FWA.GAN.4.1.1	24
DC.FWA.GAN.4.1.2	32
DC.FWA.GAN.4.1.3	72
DC.FWA.GAN.4.2	14

DC.FWA.GAN.4.1.1-1A
DC.FWA.GAN.4.1.1-2A
DC.FWA.GAN.4.1.2-1A
DC.FWA.GAN.4.1.2-2A
Component Catalogue
DC.FWA.GAN.4.1.3-1A
DC.FWA.GAN.4.1.3-2A
DC.FWA.GAN.4.2-1A
DC.FWA.GAN.4.2-2A

Rev.	Date	Description	Sign.	Veri.
P02	03/12/2024	Issued For Information	GJ	JT
P01	08/11/2024	Issued For Information	GJ	JT

JOINT VENTURE:
MC Prefab Nordics

DESIGN & BUILD PARTNERS:
CTS Nordics
BIMMS integrated engineering
MECWIDE

DRAWING NAME:
DC.FWA - GANTRY LEVEL - SOUTH GANTRY - ZONE 04

DRAWING STATUS:	SCALE:	STATUS:
Issued For Information		S2

DATE CREATED:	LAST REV. DATE:	SIGNED:	CONTROL:
08/11/2024	03/12/2024	GJ	JT

DRAWING NUMBER:	FORMAT:	REVISION:
FIN3005-BMS-B1-00-DR-J-74003	A2	P02

Intellectual Property by CTS Nordics AS, All Rights Reserved